Macrotel DIGITAL

DIGITAL STUDIO TELEPHONE HYBRID

Operating manual

(Rel. 1.1)

Via Caduti Di Sabbiuno 6/F • 40011 Anzola Emilia • Bologna • Italy ☎ +39 051 736555 • Fax. +39 051 736170
e-mail: info@axeltechnology.com • **web site:** www.axeltechnology.com

CONTENTS

1 INTRODUCTION

Macrotel Digital is a single line digital telephone hybrid, especially designed to fit all TV and radio station requirements.

With the variety of telephone systems in the world today, from cellular mobile phones to analog and to digital, it’s increasingly difficult to have all callers sound the same on-air in a broadcast environment.

The Macrotel Digital uses digital signal processing (DSP) technology to continually adapt to telephone-line conditions and to deliver the maximum isolation between the send and receive audio (> 55 dB).

With no echo and no "bottom of the barrel" sound, the Macrotel Digital is thus ideal when the very best audio quality and uniformity is required for talk shows, news feeds, production, recording studios, and even internet applications.

Several functions (selectable from front panel DIP switches) greatly expand its operation. Automatic gain control (AGC) allows each call to be delivered at the same level. Built-in caller Ducking stage reduces the caller's audio level when the announcer speaks. Auto mix-minus feature allows easy installation to consoles with no mix-minus capability.

Additionally, the hybrid can automatically answer the telephone line after the first ring and automatically disconnect it after the caller hangs up. The REC Output can be configured to contain a mix of send and caller audio or caller audio only.

In accordance to mainland Europe, USA, Canada, and UK compliance standards, the Macrotel Digital is perfect for your telephone application.

1.1 MAIN FEATURES

- **Crystal clear, consistent audio quality**
- **Continual adaptation to POTS line conditions**
- **Best isolation between Send and Receive audio**
- **Selectable caller control (ducking)**
- **Worldwide compliant**
- **Full Remote control**
- **Selectable mic / line level input**
- **Selectable automatic mix-minus**
- **Selectable AGC on Receive signal**
- **Selectable auto-answer / auto-disconnect**

2 EQUIPMENT DESCRIPTION

2.1 FRONT PANEL

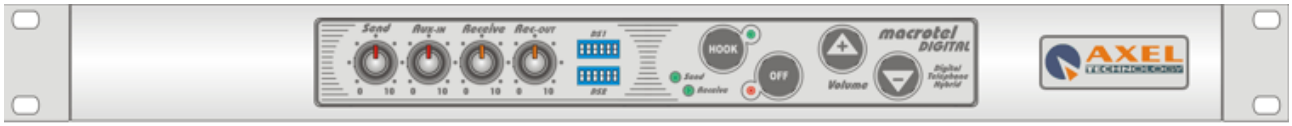

Send potentiometer it adjusts the level of audio signal sent to phone caller. At its midpoint (6 o'clock position), the pot is set for nominal send level (0dBm).

Aux-in potentiometer It adjusts the level of the auxiliary send audio coming from the remote connector input and going onto the telephone line to the caller. At its midpoint (6 o'clock position), the pot is set for nominal level (0dBm).

Receive potentiometer it adjusts the phone subscriber audio level which is provided to the user 's equipment

Rec-Out potentiometer it adjusts the level of the audio at the Rec-Out connector. At its midpoint (6 o'clock position), the pot is set for nominal level (0dBm).

DIP Switches these DIP switches configure the hybrid's system. Individual switch functions are defined in Calibration Chapter

Send LED it indicates the relative level of the send audio into the digital hybrid. Green indicates nominal level, amber indicates caution, red indicates clipping.

Receive LED it indicates the relative level of the caller audio from the telephone line. Green represents nominal level, amber indicates caution, red indicates clipping.

Hook button it allows Line hooking i.e. it connects the hybrid to the telephone line

Hook LED it blinks when a call (ring) is coming in and lights firmly while line is hooked. Please note: led switchs on only if phone line is connected

Off button it disconnects the hybrid from the telephone line and mutes all audio going to and from the telephone line

Off LED it indicates the hybrid is not connected to an active phone line. The LED illuminates red when the hybrid is powered

Volume Up / Down these buttons control the audio level on the headphone monitor output. Pressing once changes the level by 1dB. Pressing and holding a button sweeps the level up or down

2.2 REAR PANEL

ON/OFF main switch the led inside switchs on/off accordingly. If it is off while the switch is ON, please check the supplied AC cord and the fuse

AC cord receptacle the power supply socket has an integral fuse drawer containing the power fuse and a spare one

- for 220/230 V AC the fuse is rated at 250 mA T
- for 110/115 V AC tension the fuse is rated at 500 mA T

the voltage change-over switch is located inside, close to the transformer

Remote connector This DB25 female connector provides remote control and status of the hybrid. Unbalanced send in, Receive out ,and Rec out audio are also available at the remote connector. See Connector Pinouts at Chapter 3.3

Headphone Monitor 1/4" jack. It provides connection to a headphone or to a small loudspeaker for monitoring the caller audio signal. Capable of 1 watt into an 8 ohm load

Send connector This balanced, female 3-pin XLR input receives audio from the source (microphone or mixer) and sends it to the caller. Audio sent to the caller must be a mix-minus.

Receive connector This balanced, male, 3-pin XLR output contains the audio from the caller

Rec Out connector This balanced, male, 3-pin XLR output contains a mix of caller and send audio or caller audio only. See DIP switches at Chapter 4. This connector can feed a recording device to record both the caller and send audio

Line socket This RJ11 connector provides connection of the telephone line to the hybrid

Set socket This RJ11 connector allows connection to a standard analog telephone set. The telephone line is present at this connector when the hybrid is off. The telephone line is not present at this connector when the hybrid is on

3 WIRING AND CONNECTIONS

We suggest to use high quality wires, well protected, and balanced connections to avoid external EMD.

3.1 AUDIO INPUT (SEND)

The equipment features electronically balanced XLR female inputs (line level).

XLR pinout:

Pin 1	Gnd
Pin 2	Signal
Pin 3	Return

If any balanced connection is possible, please connect the cold pole (Pin 3) to the ground (Pin 1).

Factory preset input impedance is 10 kΩ. Input impedance of 600 Ω is also available, simply setting jumpers on the main board (see Chapter 4).

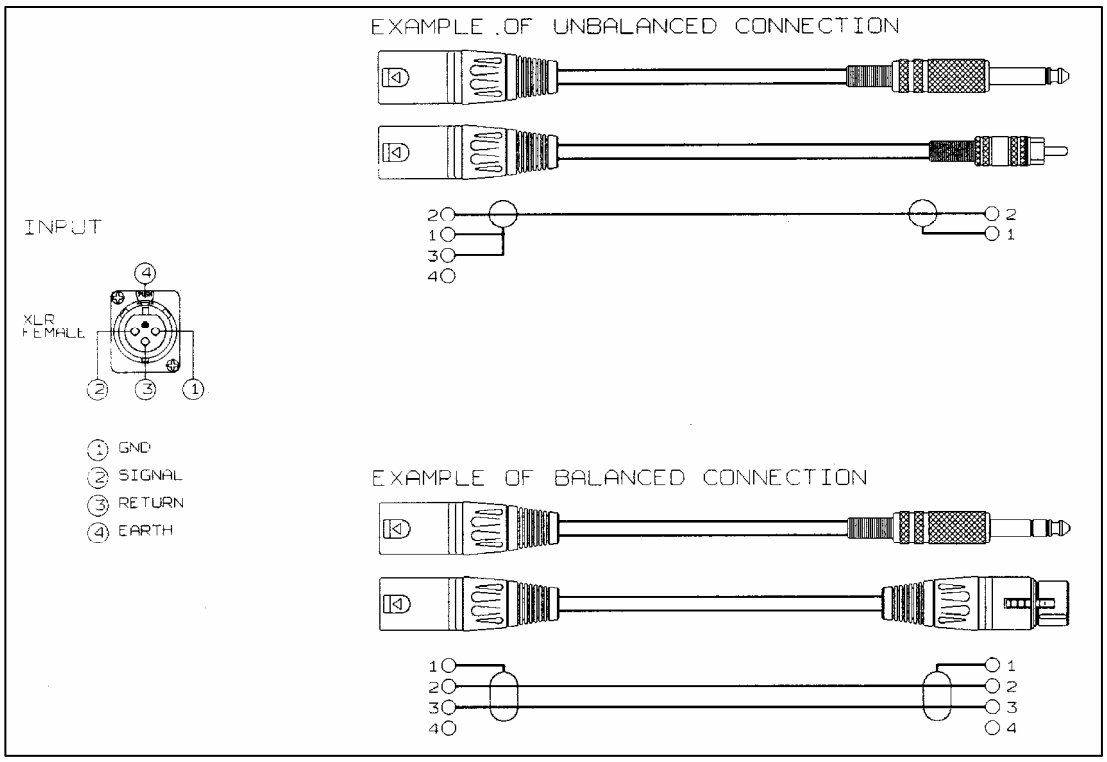

NOTE: The SEND female, 3-pin XLR input receives audio from microphone or mixer. If using a single microphone that needs phantom power to operate, you must supply this power to the microphone. The digital hybrid does not supply phantom power. Line/Mic input level selection is done through front panel DIP switch # 4.

3.2 AUDIO OUTPUT (RECEIVE AND REC OUT)

The equipment features XLR analog outputs electronically balanced by high-quality buffers, capable of withstanding even low-impedance loads (600Ω), with levels of up to +20 dBu.

XLR pinout:	Pin 1	Gnd
	Pin 2	Signal
	Pin 3	Return

In case of unbalanced connections, connect the cold pole (Pin 3) to the ground (Pin 1).

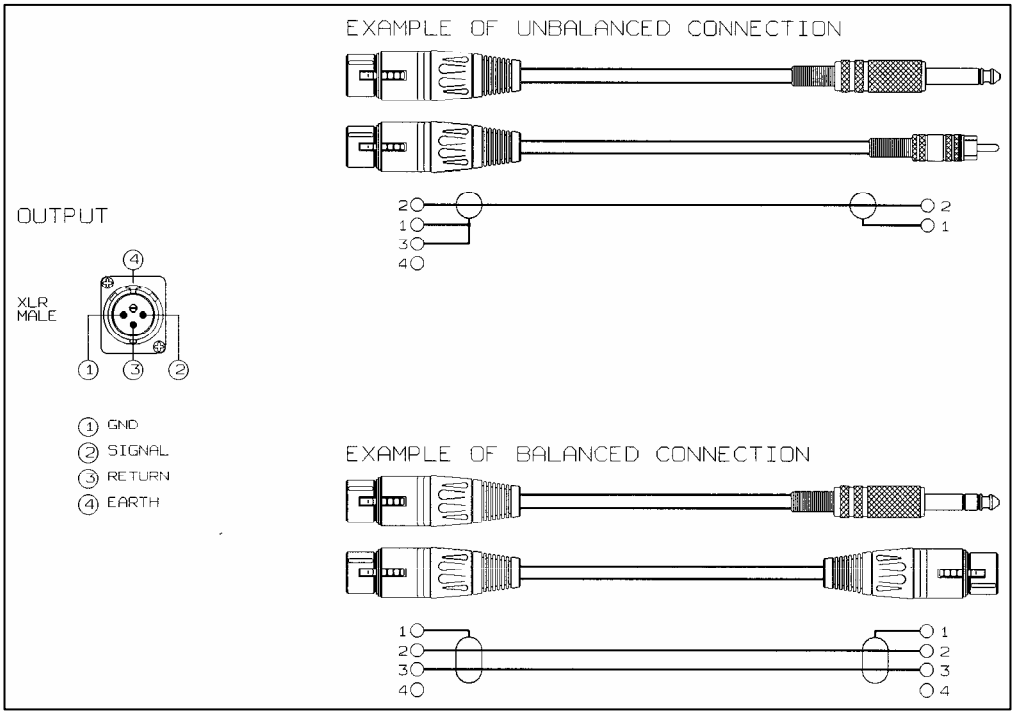

3.3 REMOTE INTERFACE

Remote Connector Pinout

Pin Description

1	Remote Hybrid On
2	Remote Hybrid Off
3	Not used
4	Not used
5	Switch / Indicator Common
6	Not used
7	Not used
8	+ 5 Volt dc (supplied via an internal 100 Ohm protection resistor)
9	Unbalanced AUX –IN Audio Input (0dBu nominal)
10	Unbalanced Receive Audio Output (0dBu nominal)
11	Unbalanced Rec Audio Output (0dBu nominal)
12	Monitor Mute Control*
13	Audio Common
14	Hybrid On Indication
15	Hybrid Off Indication
16	Not used
17	Not used
18	Switch/Indicator Common
19	Hybrid Send Presence Indicator
20	Hybrid Receive Presence Indicator
21	Switch/Indicator Common
22	Audio Common
23	Audio Common
24	Audio Common
25	Switch/Indicator Common

* Remote control provided via contact closure to Switch/Indicator Common

** Remote indicators provided via open collector outputs to Indicator Common (<15V, <39mA)

3.4 TEL LINE CONNECTION

Macrotel Digital hybrid operates on standard POTS (Plain Old Telephone Service) / PSTN (Public Switched Telephone Network) analog telephone lines or an analog extension from a PBX via a standard RJ11 modular jack.

The RJ11 socket will accept 6 conductor modular plugs, but only the 2 central conductors (typically Red & Green) are used.

3.5 PHONE SET CONNECTION

This RJ11 connector will accept 6 conductor modular plugs, but only the 2 central conductors (typically Red & Green) are used for connection to a standard analog telephone set. The telephone line is present at this connector when the hybrid is off. The telephone line is not present at this connector when the hybrid is on

3.6 HEADPHONES JACK

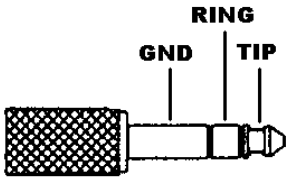

1/4. Stereo Jack - Headphone plug allows connection to an external headphone set.

Tip = + phase,

Ring = ground,

Sleeve = ground

1W output into an 8 Ohm load

4 SETTINGS

4.1 DIP SWITCHES SETTING

DIP SWITCHES are .off. in the down position and .on. in the up position.

DIP SWITCH 1 Enables/disables the Burst Adapt feature. In the .off position (down) the hybrid is in Auto Adapt Mode. In the .on. position (up) the hybrid will send a noise burst to the telephone line and aggressively adapt before returning to Auto Adapt Mode. Each press of the ON button will generate a new noise burst.
In either mode, the hybrid continually monitors and adapts to the changing telephone line conditions in order to digitally cancel the telephone line echo and provide the best send-to-caller separation possible

DIP SWITCH 2 Enables/disables the Caller Boost feature. In the .off. position (down) the caller boost feature is disabled. In the .on. position (up) the hybrid adds 6dB of level boost to the caller.s audio at the Receive connector.

DIP SWITCH 3 Allows the hybrid to work with two types of switches for external (remote) control momentary and latching. In the .off. position (down) the ON/OFF control inputs respond to momentary closures to ground.
This turns the hybrid on when it receives a momentary closure on the ON control input and off when it receives a closure on the OFF control input.
In the .on. position (up) the OFF control input is disabled and the ON control input responds to a latching closure to ground. This will cause the hybrid to turn on when the latching switch is closed to ground and the hybrid will remain on until the closure to ground is opened.
This DIP SWITCH setting also affects the operation of the front panel ON/OFF buttons. See .previous Chapter for REMOTE CONTROL connector pinouts.

DIP SWITCH 4 Sets the gain of the SEND connector. In the .off. position (down) the input is a nominal line level (0dBu) input. In the .on. position (up) the input is a mic level providing +55dBu of input gain

DIP SWITCHES 5 & 6 Enables/disables the Caller Control (ducking) feature.
In the .on. position (up) the hybrid will provide caller control, which is the suppression of caller audio when send audio is present.
In the .off. position (down) caller control is disabled. DIP SWITCH 5, when active, adds 6dB of caller control and DIP SWITCH 6, when active, adds 12dB of caller control. If both are active, then the sum of the two DIP SWITCHES is used, and 18dB of caller control is provided

DIP SWITCH 7 Enables/disables the Auto Answer feature. In the .off. position (down) the hybrid will not automatically answer the telephone line. In the .on. position (up) the hybrid will automatically answer the telephone line after the first ring

DIP SWITCH 8 Enables/disables the Auto Disconnect feature. In the .off. position (down) the hybrid will not automatically disconnect the telephone line. In the .on. position (up) the hybrid will automatically disconnect the telephone line after the caller hangs up. Note: The telephone line must provide loop drop, loop reversal or call progress signals in order for the Auto Disconnect feature to function. Most telephone systems will provide loop drop shortly after the calling party hangs up. Some PBX systems, but not all, will provide either loop drop or call progress tones such as reorder tones or busy signals. The hybrid will detect most of these signals and then auto disconnect the telephone line

DIP SWITCH 9 Enables/disables the Automatic Gain Control (AGC) feature. In the .off. position (down) the AGC feature is disabled. In the .on. position (up) the AGC feature is enabled. When enabled, the AGC feature normalizes the gain of the caller audio,

augmenting the level of .soft. callers and attenuating the level of .loud. callers. This helps provide more uniform caller audio levels at the caller output of the hybrid. The AGC works to achieve an equivalent average caller level of -30dBm from the telephone circuit

DIP SWITCH 10 Enables/disables the Automatic Mix-Minus feature. In the .off. position (down) the Automatic Mix-Minus feature is disabled. In the .on. position (up) the Automatic Mix-Minus feature is enabled. When Automatic Mix-Minus is enabled, it is not necessary for you to create a mix-minus output with your console/mixer. You can simply feed program audio to the send input of the hybrid, and the hybrid will automatically remove the caller audio from the program mix and prevent it from returning to the caller as echo, which prevents possible feedback. Note: This option should only be enabled when no mix-minus facilities are available through the console or mixer

DIP SWITCH 11 Not used

DIP SWITCH 12 Enables/disables the Aux Mix feature. In the .off. (down) position, the Rec OUT and REMOTE Rec OUT will contain caller audio only. In the .on. (up) position the Rec OUT and REMOTE Rec OUT audio will contain a mix of send and caller audio

5 OPERATION

5.1 TRAINING THE TELEPHONE ECHO CANCELLER

Upon connection to the telephone line, the digital hybrid will automatically begin its telephone echo cancellation process. This will optimize the send to caller separation. If the send to caller separation is not sufficient, you may force the hybrid to .train. itself to the telephone line by pressing and holding the ON button for one second. After one second, the hybrid will emit a burst of white noise. The noise burst allows the hybrid to aggressively adapt to the echo returning from the telephone network and allows the hybrid to maximize its send-to-caller separation.
This noise burst can be generated at any time by pressing and holding the ON button for one second. To force a noise burst on every connection to the telephone line, activate the BURST ADAPT DIP SWITCH 1. See .DIP Switches setting at the previous Chapter.

5.2 TRAINING THE MIX-MINUS

Upon connection to the telephone line, the digital hybrid will automatically begin its mix-minus echo cancellation processes. To verify/fine tune the calibration of the mix-minus, watch the SEND LED as the caller speaks. If the SEND LED is not lighting or only flashing green on the caller.s audio peaks, then the calibration is already complete. If the SEND LED is lighting solid green on caller audio, decrease the loop gain via the SEND INPUT pot or the console level control and train the telephone echo canceller. As the caller continues to speak, you should notice that the SEND LED will begin to illuminate less and less until it no longer lights green on caller audio. This process may need to be repeated if the desired results are not achieved or if the caller is complaining of excessive echo.

6 BLOCK DIAGRAM

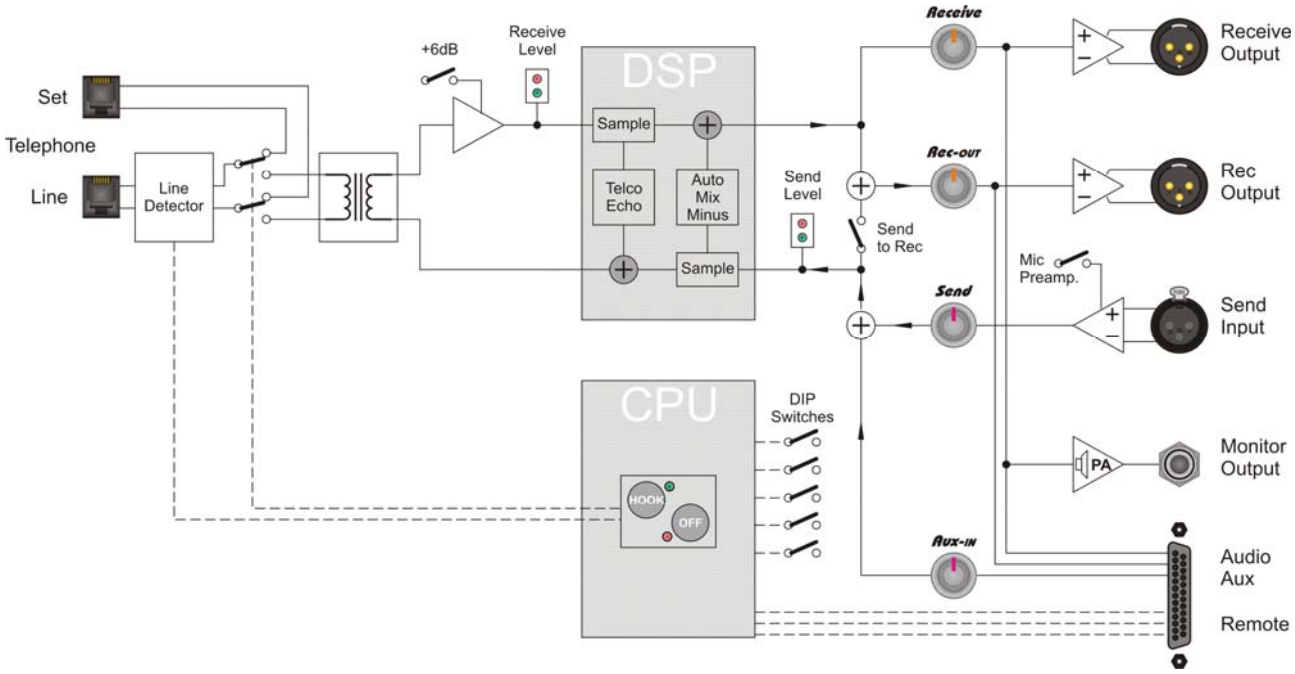

7 TECHNICAL SPECIFICATIONS

GENERAL DATA

Power Supply	220 / 110V 50 / 60 Hz 30VA
Dimension	434x351x44mm (1 rack unit)
Weight	around 4 Kg
Operating Temperature	0-38°C
Compliance	FCC, CSA, CE and CTR21

TELCO INTERFACE

Tel line connector	RJ 11 (A-Lead supervision)
Capability	POTS line, analog extension from a PBX or dry line (no DC offset voltage).
Tel Set connector	RJ 11 (A-Lead supervision)

AUDIO IN / OUT

Send input connector	XLR, electr. balanced
Send input level	Mic / Line sel. (-55 / 0 dBu)
Send Input impedance	20 KΩ
Receive Output connector	XLR, electr. balanced
Receive Output nominal level	0 dBu (adjustable)
Receive Output impedance	50 Ω
REC Out connector	XLR, electr. balanced
REC Out level	0 dBu (adjustable)
MONITOR Output Connector	Jack ¼”
MONITOR Output power	1W into 8 Ω load
Send-to-Receive separation	> 55dB (250 Hz to 3.5 kHz)
Send to Receive Tail time	32 milliseconds
Mix-Minus Rec.to Send separ.	50dB nominal
Mix-Minus Tail time	32 milliseconds

TELEPHONE TRANSMIT

Frequency Response	250Hz to 3.5kHz, ±1dB
Signal to noise ratio	>56dB
Distortion	<0.2%
Level	Nominal Send input of 0dBu is referenced to -15dBu across the telephone line

TELEPHONE RECEIVE

Frequency Response	250Hz to 3.5kHz, ±1dB
Signal to noise ratio	>56dB
Distortion	<0.2%
Level	Nominal telephone line level of –15dBu referenced to Receive output of 0dBu

REMOTE INTERFACE

Connector	DB 25 female
Control Inputs	On, Off, and Monitor Mute
Status Outputs	On, Off, Send Audio presence, Receive Audio presence
Status Outputs type	open coll. (< 15V, < 39 mA)
Additional Audio I/O (unbal.)	Receive, REC, Aux-IN

FRONT PANEL CONTROLS

On/Off	Auto Answer/Disconn Select
Send, Rcv, Rec, Aux-in Level	Ducking Sel. (0, 6, 12, 18dB)
Monitor Volume Up / Down	AGC Select
Receive Boost Select	Auto Mix-Minus Select
Remote Mom/Latching Select	Mic / Line Select
Burst Adapt Select	REC Send / Rcv mix Select

Specifications, pictures and graphic layout of this leaflet are furnished for informational use only and are subject to change at any time without notice.

8 WARRANTY

The manufacturer offers a 1-year ex works warranty.
Do not open the equipment. The warranty shall be voided if any of the warranty seals are broken.
The manufacturer shall not be liable for damage of any kind deriving from or in relation to incorrect use of the product.